PRECAST SOLID CONCRETE COVER

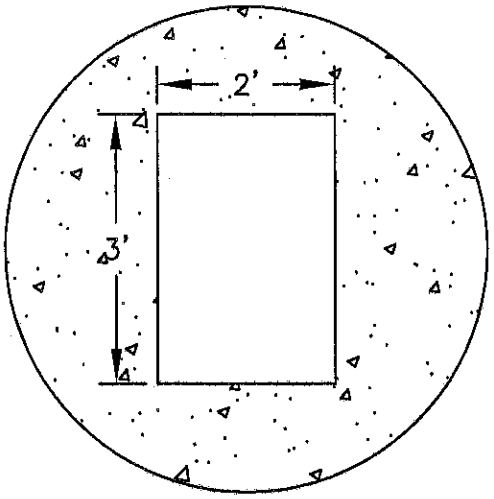

MH-CB
CENTERED
(UNLESS OTHERWISE NOTED IN PLAN)

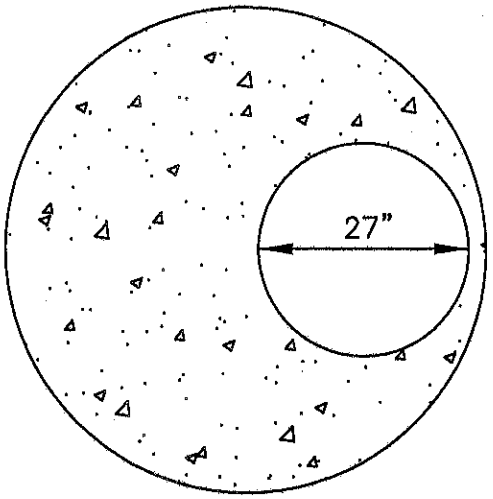

STORM MH
OFFSET
(UNLESS OTHERWISE NOTED IN PLAN)

NOTES:

1. REFER TO PLANS AND/OR SPECIAL PROVISIONS FOR FRAME AND GRATE/LID TYPE
2. SEE MnDOT PLATE NO. 4020 AND 4022 FOR PRECAST CONCRETE COVER AND 4005 FOR MANHOLE BARREL DETAILS
3. MANHOLE BARREL MAY BE CONSTRUCTED UTILIZING SOLID CONCRETE MH BLOCK INCORPORATING 3/16" HEAVY DUROWALL REINFORCEMENT EVERY SECOND COURSE
4. SEE MnDOT PLATE NO. 4011 FOR PRECAST CONCRETE BASE DETAILS
5. HIGH DENSITY POLYETHYLENE ADJUSTING RINGS SHALL BE INSTALLED PER MANUFACTURER'S RECOMMENDATION'S STARTING ON A SOLID, CLEANED TOP SECTION OF THE INPLACE STRUCTURE. FOR MANHOLES, THE OUTSIDE OF THE ENTIRE RING SECTION SHALL BE WRAPPED WITH AN APPROVED GEOTEXTILE FABRIC WITH A MINIMUM OVERLAP OF 6". FOR CB & MH-CB ADJUSTMENTS SEE PLATE NO. 1-01
6. ALL CONCRETE INVERTS SHALL HAVE A MINIMUM OF 2" CONCRETE DEPTH WITH A MINIMUM SLOPE OF 1/4" PER FOOT TO OUTLET. FLOW LINES SHALL BE FORMED TO APPROXIMATE SHAPE OF THE LOWER 4" OF THE OUTLET PIPE.

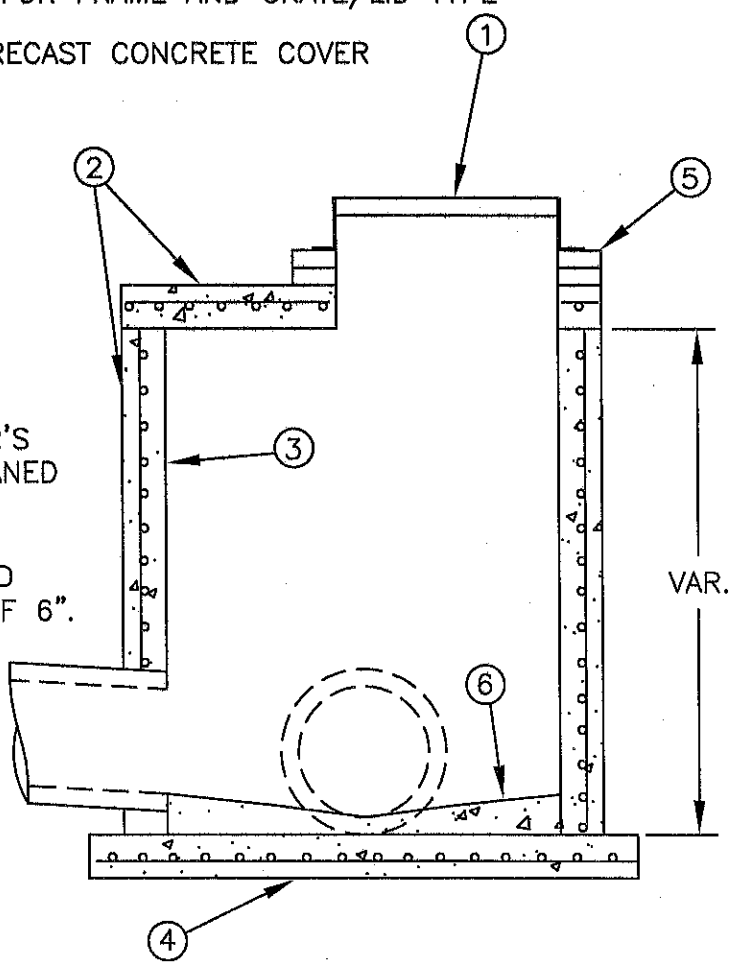

DATE REVISED	STORM MH/MH-CB	PLATE NO.
05/10/13		1-03